Ultrasonic Flaw Detection Using Split-Spectrum Processing Combined with Adaptive-Network-Based Fuzzy Inference System

H.C. Sun and J. Saniie

Department of Electrical and Computer Engineering
Illinois Institute of Technology
Chicago, IL 60616

Abstract - In ultrasonic nondestructive evaluation, in order to successfully detect flaw echoes corrupted by scattered random echoes, a robust and efficient method is required. In this paper, a method utilizing split-spectrum processing (SSP) combined with an adaptive-network-based fuzzy inference system (ANFIS) has been developed and applied to ultrasonic signals to perform the signal classification task. SSP can display signal diversity and is therefore able to provide the signal feature vectors for signal classification. ANFIS maps signal feature vectors to outputs according to an adaptive learning process and fuzzy If-Then rules. The combination of SSP and ANFIS can perform both ultrasonic flaw detection and signal classification. The SSP-ANFIS method has been tested using both simulated and experimental ultrasonic signals, and the results show that SSP-ANFIS has good sensitivity in detecting ultrasonic flaw echoes in the presence of strong clutter when the signal-to-noise ratio is about zero dB.

I. INTRODUCTION

The objective of this paper is to present a signal processing method to detect defects in solid materials such as steel and composites by using ultrasonic nondestructive evaluation (NDE). In the analysis of backscattered ultrasonic signals, the microstructure of the testing materials can be considered as unresolved and randomly distributed reflection centers [1]. The backscattered ultrasonic signal is the result of convoluting the transmitted acoustic pulse with these reflection centers. Studies [2] have shown that the grain echoes are sensitive to shifts in the transmitted frequency band and have random amplitude and phase. By contrast, flaw echoes have large intensity and are far less sensitive to the shift in the transmitted frequency band. This coherence phenomenon has been effectively utilized by using split-spectrum processing (SSP) [3]-[4] in order to enhance signal-to-noise ratio.

In this paper we use an adaptive-network-based fuzzy inference system (ANFIS) [5] to develop a robust detector, which, without the necessity of prior knowledge or any probability distribution assumption, can perform a nonlinear mapping. This nonlinear mapping, like the human brain, can learn from its environment. In other words, if we can properly present training data to ANFIS, ANFIS is able to recognize target signals. Therefore, SSP-ANFIS can solve ultrasonic flaw detection problems. The next section presents the development of the SSP-ANFIS algorithm. Sections III and IV examine the performance of the algorithm using both simulated and experimental data.

II. THE SYSTEM STRUCTURE OF SSP-ANFIS

The overall system diagram of SSP-ANFIS is given in Figure 1, including a pre-process (i.e., SSP) and post-process (i.e., ANFIS). The function of SSP is to extract signal features according to their frequency components and provide input to the ANFIS. As shown in Figure 1. SSP is implemented by a class of Gaussian bandpass filters followed by equal power factors that not only equalize the power of the output of the Gaussian filters but also normalize the signal to the range of -1 to 1. It is important to point out that the Gaussian filters are partially overlapped such that the correlation in SSP channels can provide the signal feature information. In this paper the SSP channels have been selected to cover all frequencies of the ultrasonic signals. While SSP can provide signal features, we still need a classifier to detect flaw echoes, and the ANFIS has been introduced for this purpose.

ANFIS has been developed based on the theory of fuzzy set and fuzzy logic. Unlike the probability theory that predicts the probability of a particular

0-7803-5722-1/99/$10.00

event, the fuzzy set uses its membership functions to characterize a particular outcome. Fuzzy logic uses a set of If-Then rules leading to an algorithm describing what action should be taken based on currently observed information. A typical format for a fuzzy If-Then rule is given in the following statement:

If x *is* A_1 then y *is* B_2 (1)

where x is the input, y is the output, and A_1 and B_2 are fuzzy sets characterizing the input and output spaces respectively. The if-part " x *is* A_1" is called the premise, and the then-part "y *is* B_2" is called the conclusion. The fuzzy logic fits nicely in our ultrasonic detection algorithm, because if the input is flaw then the output is exactly echo, and if the input is clutter then the output is null or zero.

In this paper, the logic has been implemented using a Sugeno type fuzzy reasoning [5] proposed in 1985. The main advantage of Sugeno fuzzy reasoning is its universal approximation property. This property is highly desirable in ultrasonic flaw detection because with a nonlinear mapping function ultrasonic flaw echoes can be properly separated from grain echoes. The general form of the If-Then rule of Sugeno fuzzy inference is given as the following:

If x_1 is A_1 and ... and x_k is A_k

Then $y = P_0 + P_1x_1 + ... + P_kx_k$ (2)

where x_1 to x_k are the variables of premise, A_1 to A_k are membership functions of the input fuzzy sets, and P_0 to P_k are parameters in the consequences. The main difference between Equation (1) and Equation (2) is in the "Then-part". In Equation (1), the output is described using a fuzzy set B_1. In Equation (2), the output of the If-Then rule is a linear combination of input variables plus a constant term. This linear combination provides the effects of input on the consequence of each If-Then rule. Then the final output is the weighted average of each If-Then rule's output. The structure of a two-input and one-output Sugeno type fuzzy inference system is given in Figure 2. (To simply the illustration, only two fuzzy If-Then rules are considered in this example) In this figure, input x_1 and x_2 both have two membership functions (i.e., A_1, A_2 and B_1, B_2 respectively) to partition the input space. In this paper we use a bell-shaped membership function which is expressed as the following:

$$\mu_{A_i}(x) = \frac{1}{1+\left[\left(\frac{x-c_i}{a_i}\right)^2\right]^{b_i}} \qquad (3)$$

where a_i, b_i and c_i are called premise parameters, and are adjustable through a training process to reach an optimal processing. The output of the membership functions are multiplied in the second layer and averaged in the third layer to find the normalized weighting factors used in the fourth layer. The output of the second layer and the third layer can be described in Equation (4) and (5) respectively:

$$\omega_i = \mu_{A_i}(x_1) \times \mu_{B_i}(x_2), \qquad i = 1,2. \qquad (4)$$

$$\overline{\omega}_i = \frac{\omega_i}{\omega_1 + \omega_2}, \qquad i = 1,2. \qquad (5)$$

and the output of the fourth layer is

$$o^4 = \overline{\omega}_i(p_{i0} + p_{i1}x_1 + p_{i2}x_2) \qquad (6)$$

In this equation, parameters p_{i0}, p_{i1}, and p_{i2} are called consequent parameters, and are also adjustable during the learning process. Then the final output is given as:

$$o = \sum_i \overline{\omega}_i(p_{i0} + p_{i1}x_1 + p_{i2}x_2) \qquad (7)$$

In order to build a fuzzy inference system to classify ultrasonic flaw echoes, the premise and consequent parameters should be properly obtained such that the signal pattern of flaw echoes can be recognized. To reach this goal, a hybrid learning strategy [5] is used to teach the fuzzy inference system the pattern of the ultrasonic flaw echoes. This learning strategy uses a least square estimation to estimate the consequent parameters, and uses a gradient method to update the premise parameters. A detailed discussion of ANFIS can be found in [5]. In the next section we applied both simulated and experimental ultrasonic signals to test SSP-ANFIS, and the performance of the algorithm is discussed.

III. COMPUTER SIMULATION AND DISCUSSION

In this study we have applied simulated ultrasonic signals with different flaw-to-clutter ratios to test the SSP-ANFIS algorithm. The simulated ultrasonic grain signal is composed using 1024 Gaussian shaped echoes with random amplitude which have been superimposed over uniformly distributed positions[2]. These Gaussian echoes have a 7MHz center frequency, and a 2.5MHz bandwidth. The flaw echo is simulated by a single Gaussian echo, (f_c=7MHz and BW=2.5MHz), embedded at a known location. In the simulation we assume that the flaw and grain echoes have the same frequency components, which makes the detection task more difficult and can best test the SSP-ANFIS system. To teach the ANFIS the

patterns of flaw and grain echoes, a training data has been simulated where the flaw-to-clutter ratio is about 2. This ratio is critical in the training process. By using this level of flaw-to-clutter ratio the ANFIS can be excited by the flaw echo while ignoring the clutter signal. The SSP-ANFIS result presented in Figure 4 is obtained by using 4 Gaussian SSP channels. The center frequency of the SSP channels are 2.5 MHz, 4.5 MHz, 6.5MHz, and 8.5MHz. The bandwidth of the SSP channels is 1.5 MHz. The number of membership functions in the first layer of ANFIS is 2. As shown in Figure 3, the SSP-ANFIS technology clearly enhances the visibility of the flaw echo and decreases the clutter noise.

IV. EXPERIMENTAL RESULTS

In order to test the SSP-ANFIS classifier in a practical situation, an experiment was conducted using a steel specimen with an average grain size of 50μm. The experimental data was measured using the contact technique. A broadband transducer with a 7 MHz center frequency was used to transmit an acoustic wavelet with a sampling rate at 100 MHz. In the SSP algorithm 4 Gaussian bandpass filters were used. These filters had a 1.5 MHz bandwidth, and a 1.5 MHz frequency step between the adjacent channels starting at 2.5 MHz. The ANFIS algorithm uses two bell-shaped membership functions as given in Equation (3) on each channel. Since only 4 SSP channels are used, the output equation is the linear combination of these 4 input elements weighted by the coefficients obtained from the fuzzy If-Then rules. The total number of fuzzy If-Then rules is 16. A typical processed result is given in Figure 4. Figure 4(a) is the input signal and a flaw is embedded at the location of 1280. Figure 4(b) is the processed output where the flaw-to-clutter ratio has been enhanced to 4. To further examine the performance of the algorithm, the SSP-ANFIS is tested using 10 experimental data and the results are given in Table 1. According to this table, the SSP-ANFIS is able to enhance the flaw-to-clutter by a factor of 3.9643.

V. CONCLUSION

In this paper, a SSP-ANFIS detector has been presented for ultrasonic flaw detection. The SSP-ANFIS involved split-spectrum processing and the fuzzy inference system. The SSP algorithm can extract signal features and provide the input to ANFIS for the purpose of signal detection. This paper presents the development of the SSP-ANFIS algorithm. In the simulation, we restricted the detection process to the worst case by assuming that the flaw echo covers the same frequency band as the clutter signal. In practice this may not be the case because the flaw echoes often exhibit a lower frequency band than that of a clutter signal. Both simulation and experimental results show that the flaw-to-cluter ratio can be enhanced by at least 10 dB when the flaw-to-clutter ratio of the input signal is about 0 dB.

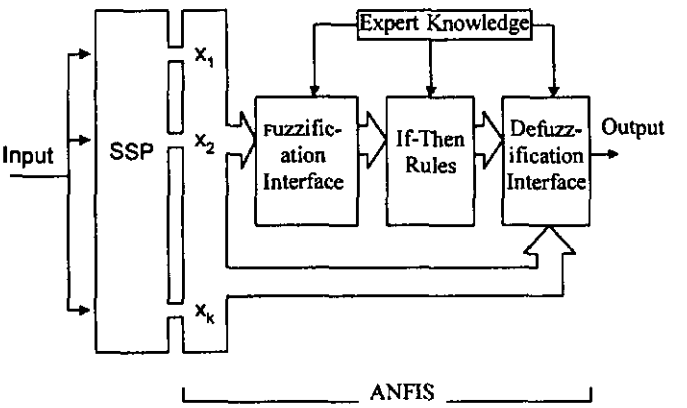

Figure 1. The structure of SSP-ANFIS system

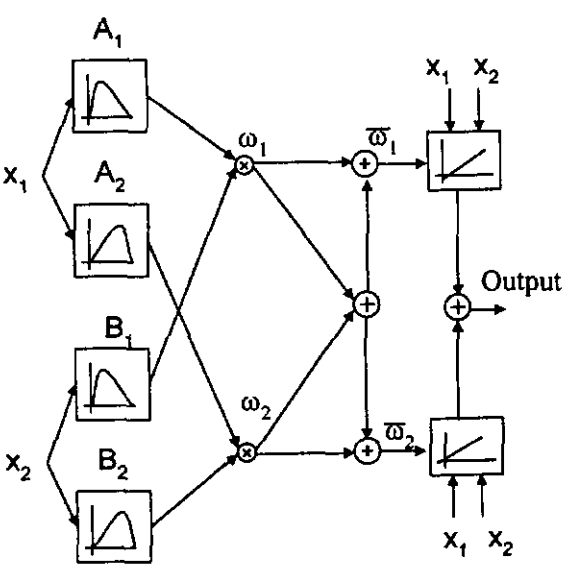

Figure 2. Two-input and one-output Sugeno type fuzzy inference system
Note: only two If-Then rules are shown in the figure.

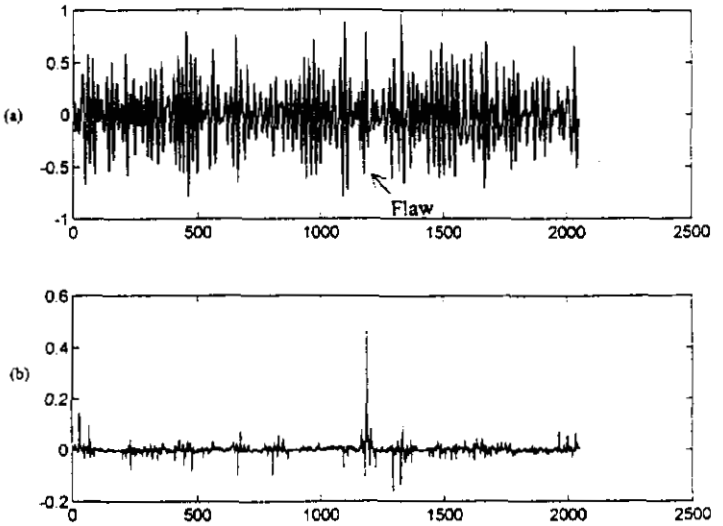

Figure 3. A typical processed result using simulated signal
(a) The simulated ultrasonic signal
(b) The SSP-ANFIS processed result

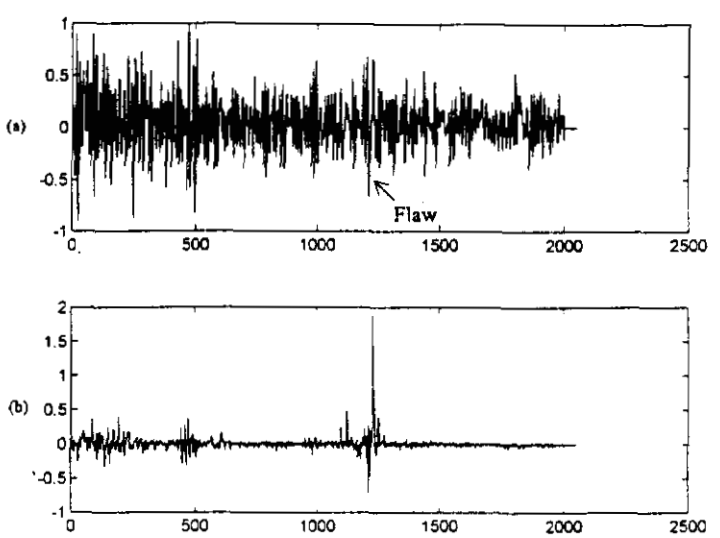

Figure 4. A typical processed result using experimental signal
(a) The experimental ultrasonic signal
(b) The SSP-ANFIS processed result

Table 1. Flaw/Clutter ratio enhancement of SSP-ANFIS using experimental signals

Trial No	SSP-ANFIS Enhancement
1	3.9731
2	6.1253
3	4.2352
4	4.2407
5	3.2353
6	3.0714
7	4.9439
8	4.4386
9	2.6947
10	2.6851
Mean	3.9643
STD	1.0843

REFERENCES

[1] T. Wong, J. Saniie, and X. Jin, "Analysis of Low-Order Autoregressive Models for Ultrasonic Grain Signal Characterization," *IEEE Trans. on UFFC*, Vol. 38, No. 2, pp116-124, March, 1991.

[2] J. Saniie, T. Wang, and X. Jin, "Performance Evaluation of Frequency Diverse Bayesian Ultrasonic Flaw Detection," *J. Acoust. Soc. Am.*, 91 (4), pp. 2034-2041, April, 1992.

[3] N.M. Bilgutay, and J. Saniie, "The Effect of Grain Size on Flaw Visibility Enhancement Using Split-spectrum Processing," *Material Evaluation*, 42, pp. 808-814, May, 1984.

[4] J. Saniie, D. T. Nagle, and K .Donohue, " Analysis of Order Statistic Filters Applied to Ultrasonic Flaw Detection Using Split-Spectrum Processing," *IEEE Tran. on UFFC*, Vol. 38, No. 2, pp.133-140, March, 1991.

[5] Jyh-Shing Jang, "ANFIS: Adaptive-Network-Based Fuzzy Inference System," *IEEE Transactions on Systems, Man, and Cybernetics*, Vol. 23, No. 3, May/June, 1993.