Ultrasonic Flaw Detection Using Discrete Wavelet Transform for NDE Applications

Erdal Oruklu and Jafar Saniie
Electrical and Computer Engineering Department
Illinois Institute of Technology
Chicago, IL

Abstract— **In this work, we analyze signal decomposition properties of discrete wavelet transform (DWT) for enhanced ultrasonic flaw detection. In wavelet signal decomposition, a collection of time-frequency representations of the signal with different resolutions is obtained. DWT allows to utilize both time and frequency domain information for compacting and decorrelating the flaw echo from clutter echoes. In this paper, we present the performance analysis of different wavelet kernels with respect to ultrasonic NDE applications and develop the wavelet selection criteria for optimal flaw detection. Experimental results indicate that DWT based flaw detection algorithms offer flaw-to-clutter ratio enhancement of 5-12 dB when the measured flaw-to-clutter ratio is 0 dB or less. DWT flaw detection system can be implemented efficiently for real time applications using reconfigurable architecture and lifting scheme.**

Keywords- discrete wavelet transform; ultrasonic NDE flaw detection; reconfigurable architecture; lifting scheme; wavelet kernels.

I. INTRODUCTION

Ultrasonic flaw detection and classification in the presence of high scattering microstructure noise (i.e. clutter echoes) is a significant and challenging problem in the nondestructive evaluation (NDE) of materials [1,2]. Clutter echoes exhibit randomness and are sensitive to frequency bands. However, flaw echoes are less vulnerable to frequency variations. Therefore, frequency diverse signal decomposition can be advantageous in differentiating the flaw information from the clutter echoes. It is the objective of this work to analyze the signal decomposition properties of discrete wavelet transform (DWT) and its application to ultrasonic NDE applications. In wavelet analysis, a collection of time-frequency representations of the signal with different resolutions is obtained. Unlike other transforms such as Fourier transform or cosine transform [3], both time and frequency domain information can be utilized for decorrelating and compacting the flaw echo from clutter echoes. We have explored techniques to benefit from both temporal and spectral properties of DWT for enhancing flaw echo visibility. In particular, the compactness properties of the DWT allow a region of interest to be determined in time-frequency representation which is essential for flaw detection. Flaw-to-clutter ratio enhancement is governed by the degree of the compactness of the flaw echo. 2D moving windows across several wavelet scales within this region of interest are utilized to reconstruct a family of signals that bear dominant information from the flaw echo. Order statistics processing of this family of reconstructed signals results in significant flaw-to-clutter ratio enhancement. In this paper, we present the performance analysis of different wavelet kernels with respect to ultrasonic NDE applications and develop the wavelet selection criteria for optimal flaw detection. The clear benefit of using DWT is the capability of fine-tuning the wavelet kernel for compacting the flaw echo information while spreading the clutter energy over a 2D plane. Experimental and simulated data have been used to examine a family of wavelets of different sizes and properties such as orthonormal, symmetric and biorthogonal for improved clutter suppression. Among many wavelet kernels, we have found that Daubechies-10, Symmlet-10, Battle-Lemarie 6, and Vaidyanathan-24 offer greater signal compaction in the time-frequency plane due to high correlation between ultrasonic echoes and wavelet kernels at certain scales. These wavelets offer flaw-to-clutter ratio enhancement of 5-12 dB when the measured flaw-to-clutter ratio is 0 dB or less. Furthermore, DWT can be implemented efficiently in hardware for real-time applications. In this study, we will also present an optimal architecture for DWT using the fast lifting scheme algorithm. In Section II, we describe the ultrasonic flaw detection algorithms that incorporate frequency diverse transforms and order statistics such as median or minimum post-processing detectors. Subband decomposition with DWT is also explained in this section. In Section III, new concepts and procedures for DWT based flaw detection are introduced. Section IV summarizes a reconfigurable realization of DWT based ultrasonic flaw detection. Finally, a brief summary in Section V concludes the paper.

II. FLAW DETECTION WITH FREQUENCY DIVERSE TRANSFORMS

Ultrasonic target detection algorithms such as Split-Spectrum Processing (SSP) employ Fourier transform and band-pass filtering for decomposing the ultrasonic signal into different frequency bands [1,2]. In our earlier work [3], fast Fourier transform (FFT), discrete cosine transform (DCT) and Walsh-Hadamard (WHT) have been shown to possess favorable frequency separation properties for ultrasonic flaw echoes. Flaw detection is achieved by post-processing certain subbands followed by order statistics processors.

Subband decomposition can be also achieved by using DWT. Recent advances in hardware realization of DWT make it an attractive alternative to other transform methods [4]. In wavelet analysis a fully scalable window is used. This window

is shifted along the signal (translation operation) and for every position the spectrum is calculated. This process is repeated many times with a slightly shorter (or longer) window (dilation operation) for every cycle [5]. In the end, the complete signal spectrum is covered with the dilated wavelets. This series of wavelets can also be interpreted as a set of bandpass filters. The outputs of this filter bank form an ensemble of signals with different spectral contents.

Fig. 1 shows the components of the DWT based ultrasonic flaw detection algorithm. An ultrasonic measuring system handles data acquisition. The experimental setup for data acquisition utilizes a pulse generator to produce the electrical impulses to drive the ultrasonic transducers. The pulse receiver is used to receive the ultrasonic echoes. The received echo signals are then digitized. DWT decomposes the digitized ultrasonic signal into subbands and provides time-frequency representation. The task of the flaw detection algorithm is to select a number of windows in order to discriminate the flaw echoes from the clutter echoes. Here, a window represents a group of scales which function as a band-pass filter similar to band-pass filtering in SSP [2]. Inverse DWT is applied to each window operation and the resulting time-domain signals are then fed into the post-processor. The post processor in the final stage is a decision block that reconstructs the time-domain signal from the incoming channels according to order statistics rules.

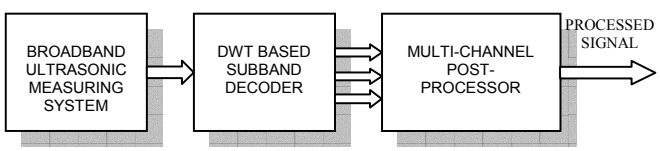

Figure 1. DWT based flaw-detection algorithm.

III. FLAW DETECTION WITH DWT

A. Procedure

For ultrasonic experimental results, we have used 2048 data points which correspond to 11 wavelet scales in wavelet transform domain. An important question is determining the frequency bands (scales) to be used for post-processing. Since the clutter echo spectrum is shifted towards higher frequencies, the flaw echo is expected to be the dominant information in lower frequencies. Wavelet domain scales in Fig. 2 confirm that the lowest scales (high frequencies) are mostly clutter information, whereas the higher scales represent the low-passed version of the ultrasonic data. Therefore, the desired frequency bands lie in the center scales. The inspection of Figure 2 confirms that the intermediate scales 3 to 6 contain dominating flaw information. Therefore, intermediate scales are a desirable choice for post processing. It is important to point out that the low-rank order statistics method including minimization is very effective if, and only if, there is no null-observation in the selected scales [1]. The choice of these scales directly influences the flaw detection performance.

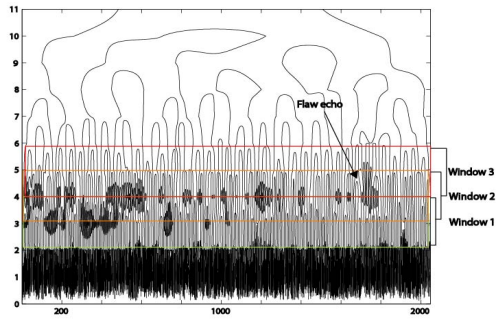

Figure 2. Wavelet scales.

The following steps are critical for flaw detection applications that incorporate DWT decomposition:

1. Identify the wavelet scales that carry flaw echo spectrum information.
2. Determine how many windows are to be utilized for signal reconstruction.
3. Find the number of scales that has to be integrated in each window.
4. Choose an appropriate wavelet kernel.

These steps are entangled and a thorough analysis regarding flaw-to-clutter ratio (FCR) improvement is necessary in order to characterize DWT performance for ultrasonic applications. We examined the frequency diversity of the flaw echo by shifting this 2D window upwards and downwards among the wavelet scales. The resulting ensemble of observations feeds the order statistics processor. In the reconstructed signal, the flaw echo is made more visible due to the vulnerability of clutter echoes to changing of wavelet scales. Increasing the number of scales to be used in the algorithm increases the chance of integrating scales that do not carry flaw information into the reconstruction step. Null observations are very critical and they hamper the FCR performance especially when using lower ranks or minimization in the order statistics processor. Using too many scales also increases the amount of overlap between windows and decorrelation of clutter echoes becomes irrelevant. On the other hand, if too few scales are used, they act as narrowband filters and a high degree of correlation exists in each channel. Consequently post-processing becomes ineffective. This analysis and our experiments indicate that a compromise is required.

In this paper, we examined two different flaw detection methods using DWT. The first method uses 3 windows with 3 scales per window. The second method uses 2 windows with 2 scales per window. Fig. 2 shows these windows and their position over the time/frequency domain. The flaw detection results indicate that using 2 scales per window may yield better performance. These findings however are not sufficient enough to characterize the DWT performance entirely for flaw detection algorithms. The type of wavelet used (i.e. wavelet kernel or wavelet filter) in the transform can alter the performance.

B. Wavelet Kernels

It is important to evaluate wavelet kernels performance since they differ in their compactness properties. Here compactness means the signal can be represented by fewer wavelet coefficients and scales. In order to understand the compactness of the kernel we look at the signal echo shape and the wavelet kernel shape. In the case of ultrasonic data, if the kernel is similar to the ultrasonic flaw echo, then the flaw echo is going to be dominant in a particular scale. Fig. 3 displays the shapes of some of the wavelet kernel functions and an experimental ultrasonic flaw echo. The desirable property of wavelet kernels should be retaining flaw echo information in as many frequency scales (subbands) as possible. This increases the success of applying order statistics on the observation channels. If only one scale carries flaw echo information, then all the other scales contribute error in the post-processing stage.

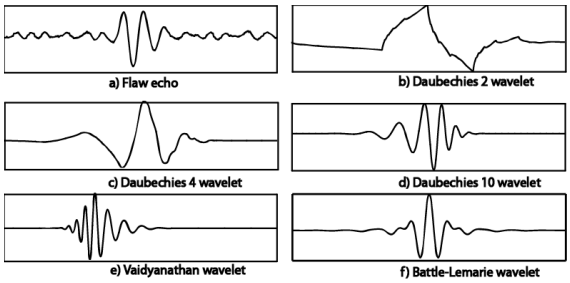

Figure 3. An example flaw echo and wavelet functions

Our study of the wavelet kernels indicates that the post-processing method and selection of the scales are governed by the characteristics of the kernel used in DWT decomposition as summarized below:

1. A desired property of the wavelet kernel is to distribute the flaw and clutter information in different scales. This phenomenon can be advantageous in selecting those scales that has dominant flaw echo information.

2. For low-rank order statistics flaw detection, the selected wavelet kernel must retain flaw echo energy in the windows consisting of multiple scales in order to avoid null-observation. This phenomenon is an anti-compactness property.

3. If a wavelet kernel with a high compactness property is used, reconstruction with only one scale may give better results than using the order statistics method based on multiple scales. Processing any other scales results in a degradation of FCR performance.

C. Results

We have examined the FCR enhancement performance of the following wavelet kernels: Daubechies (D2, D4, D6, D10,), Symmlet (4, 6, 8, 10), Coiflet (2, 6, 10), Battle-Lemarie (2, 4, 6) and Vaidyanathan-24. The numbers next to each kernel name represent the vanishing moments in the wavelet. With the increasing number of vanishing moments, the wavelet and scaling functions become smoother and more regular. Having more vanishing moments leads to a more compact representation. The Daubechies family of wavelets consists of minimal phase, compactly supported, and asymmetrical wavelets [5]. Symmlet wavelets are similar to Daubechies wavelets but they are symmetrical. The Battle-Lemarie wavelets are spline orthogonal wavelets. Table I shows the performance of these wavelets on different sets of ultrasonic data. Two windows with two scales per window are used in the algorithm for the reconstruction process. The first row in the table displays the flaw-to-clutter ratio of the experimental input data. The quality of flaw echo becomes poorer going from left to right in the table (compare the FCR for data1 to data6). The first data set has almost 0dB FCR while the last entry in the table has an FCR of -4.2 dB. It can be seen that for any given experimental data, close to 10dB FCR enhancement is possible using wavelet decomposition. Among the kernels that have been tested, higher order kernels perform better for low FCR data. Furthermore, it has been observed that Vaidyanathan and Battle-Lemarie-6 are robust flaw detection kernels.

TABLE I. FCR ENHANCEMENT WITH DWT KERNELS

	Ultrasonic Experiments						
	Data1	*Data2*	*Data3*	*Data4*	*Data5*	*Data6*	*Average FCR Improvement*
Input FCR	-0.1	-0.8	-2.1	-3.5	-3.7	-4.2	
Vaidyanathan	9.1	6.0	8.6	6.7	9.0	7.6	7.8
D2	-5.3	-4.1	-4.8	-0.9	-1.6	2.4	-2.4
D4	5.7	5.0	7.9	6.1	9.3	8.2	7.0
D6	-2.4	-8.9	1.6	5.8	1.6	0.9	-0.2
D10	2.1	1.7	7.5	8.4	8.5	6.7	5.8
Coiflet2	-2.5	-3.3	3.8	6.6	4.8	4.1	2.3
Coiflet6	-5.4	-7.6	1.9	6.4	3.7	2.7	0.3
Coiflet10	6.0	6.9	8.4	7.2	9.2	8.3	7.7
Symmlet4	-7.7	-9.2	-1.8	3.2	1.4	-3.0	-2.9
Symmlet6	-3.5	-4.6	2.2	7.0	4.9	3.2	1.5
Symmlet8	-0.1	0.6	6.9	**9.4**	6.6	5.3	4.8
Symmlet10	5.6	5.8	8.4	7.9	**9.5**	7.1	7.4
Battle2	5.9	**7.4**	**9.7**	5.2	6.9	**10.5**	7.6
Battle4	-0.7	-1.1	0.1	3.2	3.5	0.9	1.0
Battle6	**10.2**	6.0	8.0	7.2	9.0	9.9	**8.4**

In Fig. 4, Battle-Lemarie-6 kernel enhances the flaw visibility by 10 dB when compared to the original ultrasonic signal.

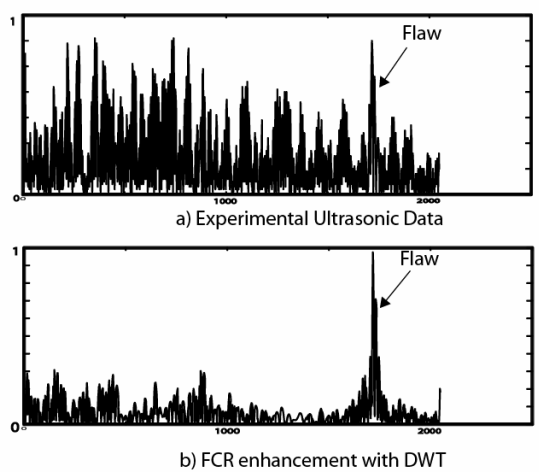

Figure 4. Flaw-to-Clutter enhancement

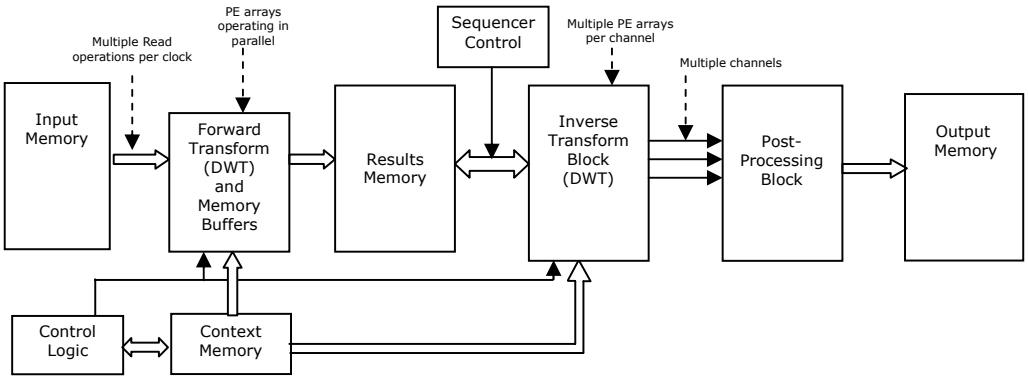

Figure 5. Reconfigurable architecture for DWT based flaw detection system

IV. HARDWARE REALIZATION

The importance of this study is finding the impact of the wavelet kernels on the clutter echo suppression using order statistics method. No conclusive agreement can be found on a single kernel for every environment. Therefore it is imperative that hardware realizations support different kernels. This can be accomplished by using reconfigurable FPGA architectures for more flexibility. The lifting scheme [4], which is an efficient method for DWT implementation, is a very good candidate for reconfigurable FPGA realization. Any wavelet filter can be decomposed into a finite sequence of simple filtering steps, which are called lifting steps. The lifting scheme offers several advantages compared to conventional DWT filter convolution architectures. It requires 2-4 times fewer arithmetic operations and in-place calculation and integer-based operations are possible [6].

Fig. 5 shows the main system components of the flaw detection architecture which consist of a forward transform block, a 2D windowing or bandpass filtering block (sequencer), a multi-channel inverse transform block and a post-processing block for signal reconstruction. Ultrasonic data consisting of 2048 points sampled at 100MHz are processed by an array of processing elements (PEs) which carry out the datapath computations required for each lifting step. In the reconfigurable architecture, a single processing element (PE) can implement one lifting step operation. Each PE consists of data path elements including multiplier, adder and multiplexer units. These elements are configured during run-time initialization for different wavelet kernels. Depending on the wavelet kernel and corresponding lifting factorization, a number of PEs are cascaded to form an array of PEs. The same PE arrays are also used in the inverse transform block. PE resource allocation enables parallel implementation of inverse DWT channels. The resulting architecture is an adaptable ultrasonic processor with robust performance in all environments [7]. Scalable PE architecture design ensures an efficient, compact and fast implementation of flaw detection algorithms.

V. CONCLUSION

In this study, we have analyzed flaw-to-clutter enhancement of ultrasonic signals using DWT. Important factors that influence FCR performance have been presented. The frequency scales used in the post-processor and the type of the wavelet kernel are two critical design aspects. The experimental results indicate using high order kernels yields better performance. An efficient hardware realization which can facilitate real-time selection of wavelet kernels is also discussed.

REFERENCES

[1] J. Saniie, D.T. Nagle, K.D. Donohue, “Analysis of order statistic filters applied to ultrasonic flaw detection using split spectrum processing”, IEEE Trans. on Ferroelectrics and Frequency Control, vol. 38, March 1991.

[2] J. Saniie and D.T. Nagle, “Analysis of order statistic CFAR threshold estimators for improved ultrasonic flaw detection”, IEEE Trans. on Ultrasonics, Ferroelectrics and Frequency Control, vol. 39, no. 5, pp. 618-630, September 1992.

[3] E. Oruklu and J. Saniie, “High speed design and performance evaluation of frequency diverse orthogonal transforms for ultrasonic imaging applications”, IEEE Symposium on Ultrasonics, vol. 1, pp 258-261, October 2003.

[4] W. Sweldens, "The lifting scheme: A custom-design construction of biorthogonal wavelets", Appl. Comput. Harmon. Anal., pp. 186-200, 1996.

[5] A.Cohen, I. Daubechies, and J.C. Feauveau, “Biorthogonal bases of compactly supported wavelets”, Comm. on Pure Applied Mathematics, pp. 485-500, 1992.

[6] J. Reichel, "On the arithmetic and bandwidth complexity of the lifting scheme", 2001 International Conference on Image Processing, vol.3, pp. 198-201, October 2001.

[7] E. Oruklu and J. Saniie, “Reconfigurable Architecture for Target Detection in High Density Clutter Environments using Subband Decomposition Algorithms”, GSPx conference, September 2004.