Information Transmission Through Solids Using Ultrasound

Invited Paper

Jafar Saniie, Boyang Wang and Xin Huang

Embedded Computing and Signal Processing Research Laboratory
Department of Electrical and Computer Engineering
Illinois Institute of Technology, Chicago, Illinois, U.S.A.

***Abstract*— Ultrasonic signals can be utilized as a viable communication method to transmit information through gas, liquid, and solid channels or a mixed media consisting of a solid interfaced with liquid and/or gas. Underwater communication channels using sound waves cause many challenges, often unforeseen, due to absorption, scattering, refractions, reverberations, multipaths, doppler shifts, temperature, salinity, and acoustic scintillation. Ultrasonic communication through the air is less prone to the environmental challenges that are often encountered in the underwater communications. Ultrasonic communication in solid channels is also adversely affected by absorption, scattering, refractions, reverberations, beam skewing, dispersion, mode conversation, multipaths, and above all these challenges are compounded by the geometrical structure of solids and type of ultrasonic waves. With solid structures many different ultrasonic wave types can be generated including Longitudinal (Compressional), Shear (Transverse), Surface-Rayleigh, Plate-Lamb (Symmetrical or Extensional Mode and Asymmetric or Flexural Mode), Plate-Love, and Stoneley (Leaky Rayleigh). The type of waves is governed by the frequency and angle of the incident waves on a solid structure where the quality of the signal for communication is limited by the composition and geometrical shape of the solids. For this study we have developed a testbed platform using the ZYNQ SoC (System-on-Chip) FPGA by Xilinx which offers reconfigurability and high-performance computational capability, high speed signal converters, power amplifiers for excitation of transducers, low noise receiving amplifiers and high frequency ultrasonic transducers for transmitting and receiving information. Theoretically, ASK (amplitude shift keying) or any form of digital modulation can be realized with the system using the concept of the software-defined ultrasonic communications (SDUC). In practice, the received signal is very complex, primarily caused by dispersion, reverberation, and multipath effects. We have examined SDUC system using AM (Amplitude Modulation), OOK (on and off keying), BPSK (Binary Phase Shift Keying), QPSK (quadrature phase shift keying), and OFDM (orthogonal frequency-division multiplexing). This system is tested using differently structured solid channels (such as blocks, plates and pipes); and bitrates and bit rate errors are compared using 2.5 MHz ultrasonic transducers. Furthermore, this paper presents an overview of using EMAT for ultrasonic communications in metal channels.**

Keywords*— *Software Defined Ultrasonic Communications Platform, System-on-Chip Design, Orthogonal Frequency-Division Multiplexing (OFDM), Solid Channels

I. INTRODUCTION

Ultrasonic signals are elastic waves that can be the carrier of information through different channel made of gas, liquid and/or solids. In certain environment, ultrasonic signals can be utilized as a viable communication method. Different from electromagnetic waves that are commonly used for information communication, transmission of information bearing ultrasonic waves in solid channels can be very complex and challenging due to multipaths and mode conversion effects [1] [2] [3] [4].

This paper presents an overview of using ultrasonic signals as a carrier of information in different type of channels. Various research works in this area will be examined and discussed. In our research laboratory, we are studying ultrasonic signals for communication in solid channels with software defined ultrasonic communication (SDUC) system [5] [6] [7]. Several experiments are designed with different transducers, modulation techniques, and channel configurations.

Figure 1 shows selected applications of using ultrasonic signal for information transmission: (a) Near ultrasonic signals are used for communication between consumer level hardware such as smart phone using its microphone and speaker [8], (b) Ultrasonic beacon cluster is used for indoor navigation with triangulation location algorithm [9] [10], (c) A group of ultrasonic transmitters can be used to design a directional ultrasonic speaker also known as parametric speaker array [11], and (d) Underwater navigation system is using ultrasonic signal for communication since RF electromagnetic signals cannot penetrate in deep water [12].

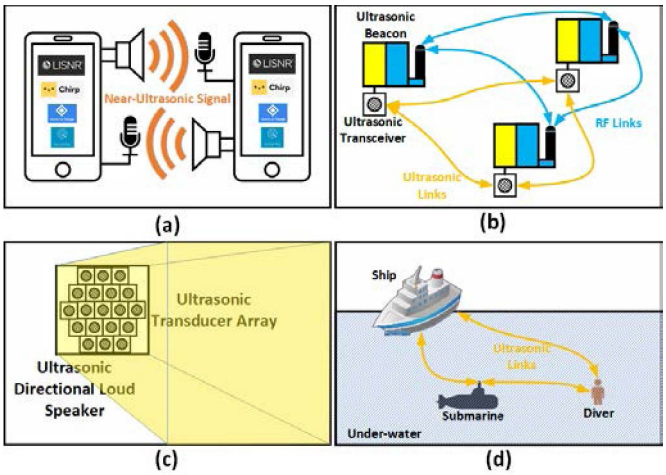

Figure 1. Ultrasonic Communication Applications: (a) Near-Ultrasonic Communication using Consumer Devices; (b) Indoor Navigation using Ultrasonic Beacons; (c) Ultrasonic Directional Loud Speaker; and (d) Underwater Ultrasonic Navigation and Communication System.

Authorized licensed use limited to: Illinois Institute of Technology. Downloaded on October 02,2020 at 15:17:54 UTC from IEEE Xplore. Restrictions apply.

In certain environments and conditions, using ultrasonic signal as a carrier of information seems to be the only option. For example, in deep underwater channels, sound signals carrying data is more efficient and consequently become a more practical and preferred communication method over electromagnetic (EM) message transmission which has limited signal penetration. For example, researchers performed underwater (fresh water channel) information transmission experiments using 2.4 GHz ISM (industrial, scientific and medical) radio frequency band. In their experiments, results indicate that the signal is completely lost at a distance of 18 cm [13]. For deep underwater communication, this is not the worst-case scenario. The ocean water is conductive, its attenuation to EM signals is more significant at higher water conductivity [14]. Similar situations apply to the underground communication [15].

Information bearing ultrasonic signals for underwater communications are widely used. For underwater operation, divers must find a practical method to communicate with each other. A common method is to use hand signals. However, limited information can be exchanged and furthermore, this type of communication is only possible when there is good visibility. A practical underwater communication system [16] allows voice communication over a reasonable distance (50-500 meters depending on sea conditions and noise levels) between divers and with the surface. The information bearing signal is modulated using single-side band (SSB) technique and the transmitted sound is sampled by a microphone receiver. After the modulated signal travels through the channel, it will be picked up by the receiver transducer and demodulated. Then, the demodulated sound signal is sent to a speaker to be heard by the receiver.

The security of the radiofrequency (RF) electromagnetic communication (EM) is suffered from remote signal interception and eavesdropping due to its characteristics when propagating in air. Air-borne ultrasonic communication may be used as an alternate for building a secured short-range indoor communication system. The coverage distance of acoustic signal can be easily controlled to a limited area. There is also a concern in regards to the safety of RF signal radiation. Researches claim that the exposure to certain amounts of RF radiation may have a negative impact on the public health including possible carcinogenic, reproductive and neurological effects [17]. Using low frequency acoustic signal for air-borne wireless communication may be a potential solution for this issue. Also, the ultrasonic signal above 20 kHz cannot be heard by most human beings.

Recently, a near ultrasonic communication protocol in the 18.5-20 kHz band is developed to transmit information over two consumer level hardware [8]. The modulation method for a near ultrasonic communication is Direct-Sequence Spread-Spectrum modulation (DSSS). DSSS is a spread spectrum modulation technique that is designed for reducing overall signal interference. With this system, the bitrate can reach to 94 bit/s. One of the applications that can be adapted using data-over-sound communication system is transaction validation. This technique is already adapted by an online payment platform in China called ALIPAY as a viable alternate to conventional QR barcode. With the transaction validation using near ultrasound, this validation process will happen on the speaker and the microphone of the device (e.g., the smart phone). The payer specifies the amount of the transaction and point his phone to the payee's device. These two devices communicate in a secure near-ultrasonic frequency band.

Indoor navigation is difficult and often very complex. Using ultrasonic signal for indoor navigation is a promising solution [18]. The main idea behind ultrasonic indoor navigation system is that the sound travels at around 340 m/s in the air. In a typical ultrasonic indoor navigation system, there are many beacons [9]. Each beacon is equipped with RF communication method and one or multiple ultrasonic transceivers. Beacons are connected to each other using RF communications. The transmission speed of the electromagnetic wave in air is negligible compare to 340 m/s. Certain numbers of the beacons are arranged in predetermined positions serving as landmarks for the indoor navigation. By calculating the distance between the moving beacon and each of the landmark beacons, the position of the moving object can easily be calculated using triangulation location [19].

Another important application of ultrasonic information transmission is ultrasonic isolation speaker also known as parametric speaker array [11]. Conventional speakers are omnidirectional so that everyone can hear the sound. The ultrasonic directional speaker uses ultrasonic carrier waves to transmit audio to listeners in a focused beam of sound. To be more specific, the ultrasonic transmitter as shown in Figure 1(c) are aligned in an array. The audio signal is amplitude modulated with the carrier frequency of 40 kHz before transmission. After the ultrasonic waves are generated with an array of transmitters, the generated waves intersect with each other to form an audio signal that can only be heard if the listener is positioned precisely in the focal region.

One of the important communication topics is the modulation techniques. In communication systems, the information to be transmitted is contained in a baseband signal. Baseband signal represents the original or pre-processed information in the low frequency range. To transmit this information more efficiently, the baseband signal must be embedded on a carrier frequency, this process is called modulation. Carrier signal is a periodic waveform at a high frequency that can easily propagate in the channel.

Modern communication systems adapt In-phase and Quadrature (IQ) modulation as an efficient and reliable way to transmit information. The architecture of IQ modulation and demodulation can be realized using the digital platform such as FPGA or DPS [20] [21] and software defined radio (SDR) applications. Figure 2 shows the block diagram of the IQ modulation and de-modulation. As indicated in Figure 2, in-phase component is multiplied by cosine carrier and quadrature component is multiplied by sinusoid carrier. The modulated signal is the summation of these two orthogonal components. The de-modulation procedure is found by multiplying the received signal with both sinusoid and cosine waves generated by a local oscillator at the same frequency. This will shift the baseband signal from carrier frequency back to baseband frequency. A lowpass filter recovers the transmitted baseband information. With the IQ modulation and demodulation, we can implement most of the modulation methods. Depending on the type of the signal being modulated, the modulation techniques can be classified into analog modulation and digital modulation.

Authorized licensed use limited to: Illinois Institute of Technology. Downloaded on October 02,2020 at 15:17:54 UTC from IEEE Xplore. Restrictions apply.

Analog modulation such as AM, FM, PM, DSB and SSB are widely used for analog audio and video signal transmission. Digital modulation methods such as PSK, ASK and FSK are more used in modern communication systems since they are more robust to the noise.

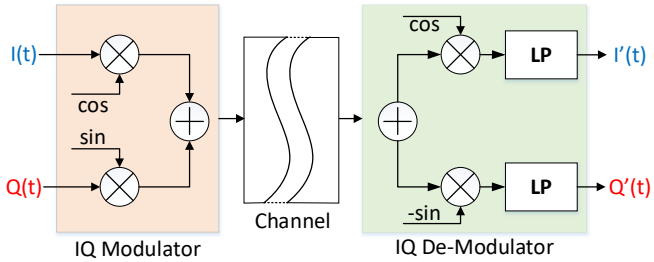

Figure 2. In-phase and Quadrature Modulation Block Diagram

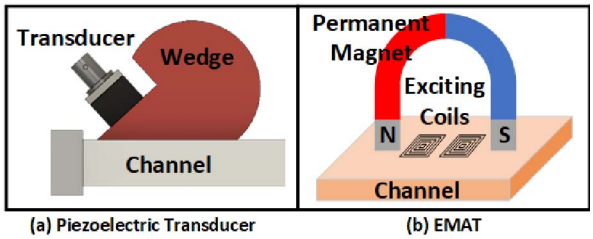

Figure 3. Ultrasonic Transducers

To use ultrasonic signal as the information carrier, the system must be able to transfer energy between electrical signal and mechanical elastic waves. This is done by using ultrasonic transducers. An ultrasonic transducer is designed to convert electrical energy into ultrasonic elastic waves and vice versa. There are mainly three types of ultrasonic transducers including, Piezoelectric transducers (PZT), Electromagnetic Acoustic Transducers (EMAT) and Capacitive Micromachined Ultrasonic Transducers (CMUT). Each type of transducers has its own unique characteristics and applications. Piezoelectric transducer (see Figure 3(a)) is the most widely used ultrasonic transducers. It is a device that uses the piezoelectric effect to convert the electrical charges into mechanical vibrations and vice versa. Piezoelectric transducer is used with ultrasonic coupling gel to ensure maximum energy coupling. Also, it is often paired with angle wedge to generate different waveform modes. The piezoelectric transducers are highly suitable for conducting ultrasonic communication experiments.

EMAT is also widely used in Non-Destructive Evaluation (NDE). The general structure of the EMAT is displayed in Figure 3(b). The advantage of using EMAT as the signal transformer compared to the conventional ultrasonic transducers is that it is non-contacting transducers for generating ultrasonic elastic waves. For this reason, EMAT has been widely studied and used for NDE applications. Recently, EMAT was researched for ultrasonic communicate in solid channels [7]. Another common ultrasonic transducer is CMUT [22]. CMUTs are micromachined devices and easy to fabricate. This means larger numbers of CMUTs can be fabricated into the transducer array. The CMUT has a higher air coupling efficiency and has been used widely for air-borne ultrasonic communication experiments [23].

II. System Implementation Methods

To systematically explore ultrasonic communication through different channels, we examined several case studies. We designed and explored two types of system configurations as described in the following sub-sections. Each system configuration has its own advantages and disadvantages.

A. Experimental Systems

The most straight forward setup for ultrasonic communication is the experimental system shown in the Figure 4. For this system configuration, standard laboratory test equipment is used for experimentation. This system is built with an Arbitrary Function Generator (AFG), Amplifiers, Oscilloscope, Impedance Matching Device and a Processing Unit. On the processing unit, MATLAB, LABVIEW, or Python code can be used to control test equipment and to process the communication signal.

One of the advantages of this system setup is that the entire system is modular and the signals are fully controllable. With the help of the high-level software such as MATLAB or LABVIEW, ultrasonic communication experiments can be easily conducted as designed. There will be no synchronization problem between transmitters and receivers since the system share the same modulation and demodulation clock. More importantly, the signal can be monitored with the channel. This allows the researchers to analyze the impact of the communication channel and the effect of multipath, dispersion, attenuation, and reverberation. It is important to mention that this communication system configuration is expensive, and it is not suitable for real-time communications.

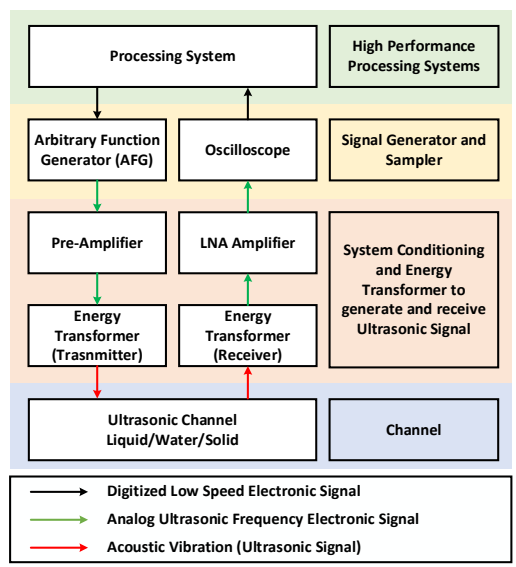

Figure 4. System Diagram of Experimental Setup for Ultrasonic Communication Systems

It is almost impossible to implement real-time communication using the setup shown in Figure 4. The frequency of the modulated signal and carrier signal are usually very high. The system must generate and sample the data at a very high frequency. It will require tremendous amount of processing powers from the processing system to consume all the data in real-time. The signal transmitted is pre-determined

Authorized licensed use limited to: Illinois Institute of Technology. Downloaded on October 02,2020 at 15:17:54 UTC from IEEE Xplore. Restrictions apply.

by the programmers. Therefore, this system can only be used to study the activity of the ultrasonic signal in the channel and the feasibility of using acoustic signal for communication.

Figure 4 demonstrates the general block diagram of an experimental communication system using acoustic waves. In this type of system, a high-performance processing system (usually a desktop PC) is required to control all the devices and processing the data. With the help of test and measurement hardware such as an AFG and a digital oscilloscope, signal can transmit through a solid channel and is received by the digital oscilloscope. Due to the characteristics of these laboratory test systems, this process is not in real time. The communication in between the processing system and laboratory equipment is done through general-purpose digital ports such as GPIB, Ethernet or USB port. The signal on the laboratory devices are buffered since the general-purpose ports won't be able to match the speed of the generation and sampling of analog signals. Before the signal is sent to the channel and after the signal is sampled from the channel, necessary analog signal conditioning components such as amplification, filtering must be added to amplify the information and suppress the noise.

B. Software Defined Ultrasonic Communication (SDUC)

Figure 5 shows a more dedicated system for conducting ultrasonic communication. This type of system is usually built with high-performance and re-configurable hardware devices such as FPGA, CPLD, ASIC, or DSP. As mentioned in the introduction section, the baseband information must be modulated before transmission and de-modulated after reception. Since the carrier signal has a higher frequency compared to the baseband signal, we can call this process Digital Up Converter (DUC) and Digital Down Converter (DDC). In different systems, DDC and DUC can be built with different methods, algorithms and hardware. The DUC and DDC structure have already been discussed in the previous section as IQ modulation and IQ demodulation.

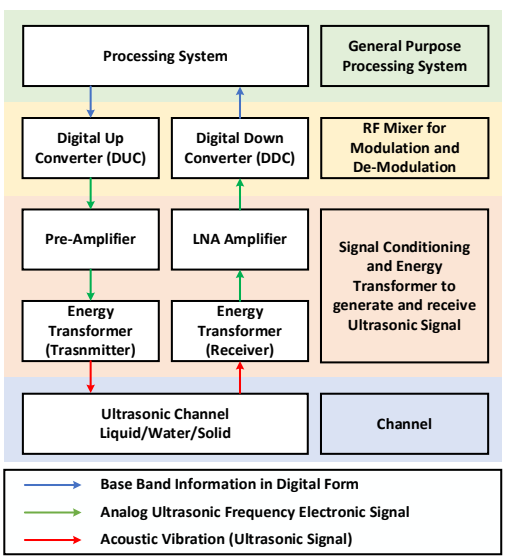

Figure 5. Block Diagram of Software Defined Ultrasonic Communication (SDUC) Systems

The SDUC system is flexible and reconfigurable. The ADC and the DAC are used to generate and receive the signals at ultrasonic frequency. Digital DUC and DDC are implemented in hardware platform such as FPGA. Also, the high speed processing can be realized using the FPGA.

III. Waves in Solid Channel

The ultrasonic wave propagation in the solid materials used as channels for communications are critical for communication bitrates (BR) and bit rate errors (BER). Typical solid structures used as communication channels are plates, pipes, rods or cylinders. Ultrasonic waves exhibit different dispersive characteristics depending on the solid materials and their geometric structures. Figure 6 shows the critical angles for generating different ultrasonic waves (longitudinal wave, shear wave and surface wave) using the angle beam wedge. Surface waves also known as Rayleigh waves travels along the surface of solids over a large distance. Another type of surface wave is transverse waves propagating along the surface. This type of wave is called the Love wave [24]. Lamb waves or plate waves [25] are generated in thin (the thickness is less than the wavelength) layered material (e.g., plate, shell or pipe). Figure 7 shows the generation of Lamb wave. Shear Horizontal (SH) waves are formed by the interference of transverse horizontally polarized waves.

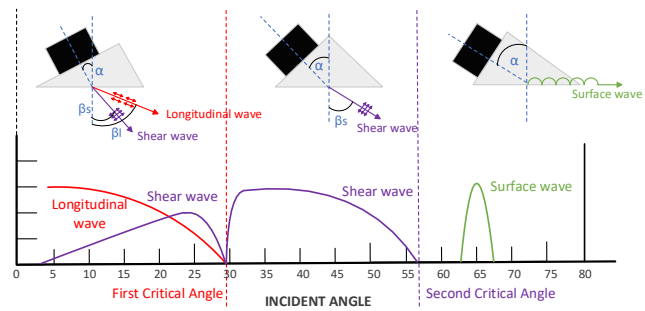

Figure 6. First and Second Critical Angles to Generate Ultrasonic Waves

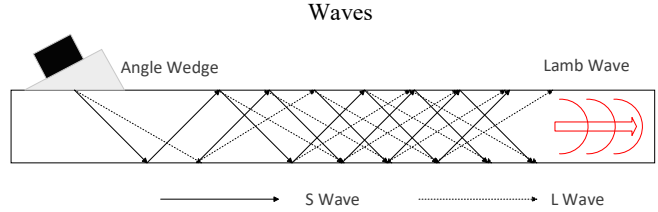

Figure 7. Generation of Lamb Waves

PPM-EMAT [26] can selectively excite different modes of SH waves. Two typical guided waves in hollow cylinders are longitudinal (L) and torsional (T) waves. They are not identical to the Lamb wave and shear wave which occur in plate. Figure 8 shows the vibration direction and propagation direction of longitudinal wave and torsional waves. Longitudinal wave travel via flexural/compression motion in the radial and axial directions [27]. Torsional wave (T-modes) travel via a shearing motion.

Authorized licensed use limited to: Illinois Institute of Technology. Downloaded on October 02,2020 at 15:17:54 UTC from IEEE Xplore. Restrictions apply.

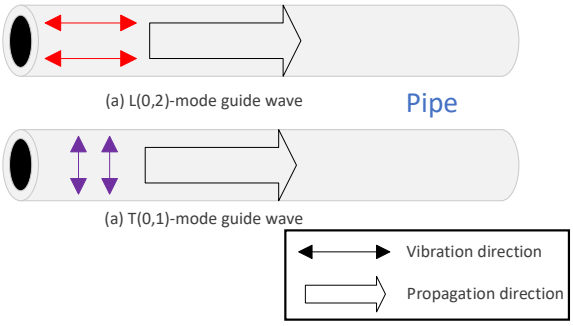

Figure 8. Oscillation Patterns of Longitudinal and Torsional Waves

IV. SDUC System Architecture

Figure 9 shows the Software Defined Ultrasonic Communication (SDUC) system. SDUC consists of two ZYNQ SoC based development boards, both are configured as transceivers. The system is controlled by a personal computer (PC) through high level software such as GNURadio or simply Python. Only the low-frequency baseband signal will be exchanged between the ZYNQ SoC. The baseband signal generated by the PC will be sent to a transmitter through the Ethernet cable to the ARM processor. Then, ARM processor passes the signal to the FPGA with AXI-Lite bus. On the FPGA, this baseband signal is processed by a digital up-converter (DUC) and sent to the on-board DAC. After the signal is sent through the channel, it will be sampled by the on-board ADC. Depending on the channel condition, amplifiers maybe necessary to increase the signal-to-noise ratio. The sampled signal is processed using a digital down-converter on the FPGA to recover the baseband signal.

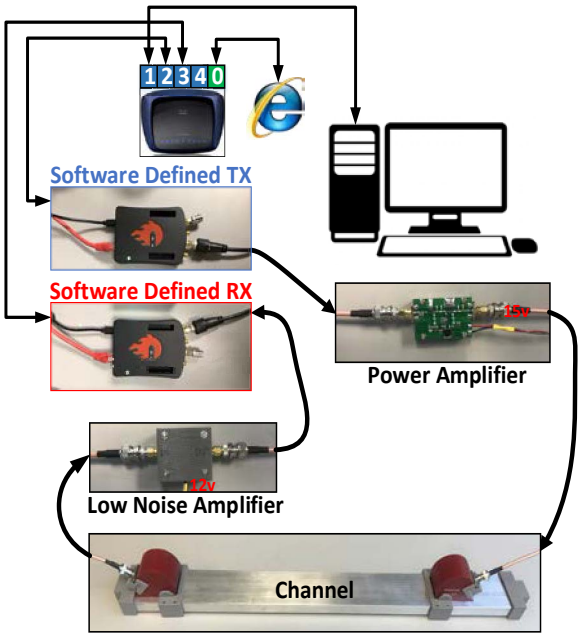

Figure 9. Software Defined Ultrasonic Communication Platform

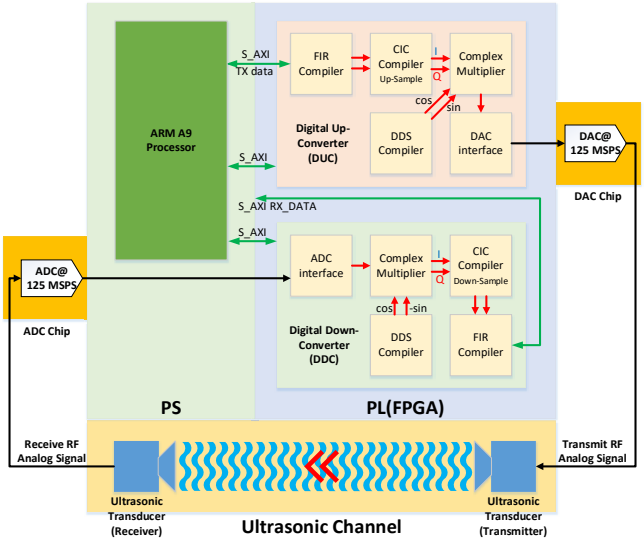

Figure 10. Software Defined Ultrasonic Communication System Block Diagram

Figure 10 demonstrates the detailed system block diagram of the SDUC system on a ZYNQ, an All Programmable (AP) System-on-Chip (AP-SoC). ZYNQ AP-SoC is a device developed by Xilinx which integrate ARM-based Processing System (PS) and FPGA-based Programmable Logic (PL) on the same chip [28]. This makes ZYNQ AP-SoC fully reconfigurable on both software and hardware aspects. Also, it makes ZYNQ AP-SoC ideal for building SDUC system. The ARM processing is used to generate and receive the baseband signal at a low frequency by using the general purpose AXI-Lite bus protocol. On the FPGA, the signal is transmitted using high speed AXI-Stream bus protocol. In Figure 10, AXI-Lite interface is marked with green arrows and AXI-Stream is marked in red. The FPGA on chip will handle most of the heavy computations including DUC and DDC. FPGA also allows the system to be able to interface with high speed ADCs and DACs without using additional circuits. The cascaded integrator-comb (CIC) compiler is a Xilinx LogiCORE IP core which provides the ability to design and implement AXI4-Stream-compliant CIC filters [29]. CIC multi-rate filters are commonly used for implementing large sample rate changes in digital systems. In SDUC systems, the carrier frequency is much higher than the baseband frequency. A CIC filter is necessary for both DUC and DDC subsystems to match the sampling frequency of the carrier signal and the baseband signal. The Direct Digital Synthesizer (DDS) compiler is a Xilinx LogiCORE IP core which is used to generate precise Sine and Cosine waveforms for DUC and DDC [30].

Figure 11 demonstrates four channel configurations that are used to conduct ultrasonic communication experiments through solids. Configuration A (Figure 11(a)) is a loop back connection and is mostly used for system test under ideal situations and transducer response measurement and etc. In this configuration, the transmitter transducer and receiver transducer are connected back to back to ensure the maximum reception of the acoustic energy. Configuration B (Figure 11(b)) uses an acrylic block as the communication channel. In this configuration, the

Authorized licensed use limited to: Illinois Institute of Technology. Downloaded on October 02,2020 at 15:17:54 UTC from IEEE Xplore. Restrictions apply.

transducers are connected perpendicularly to the surface on two ends of the acrylic column. Configuration C (Figure 11(c)) is similar to configuration B except that the acrylic column is replaced by a metallic bar. In Configuration D (Figure 11(d)), the ultrasonic signal is transmitted thorough a solid bar with oblique angle wedges. Sliding fixtures are designed to move the transducers and wedges along the solid bar. To ensure good impedance coupling between the transducer and the ultrasonic channels, coupling gel with medium viscosity is applied to the surface of the transducers and the solid channel.

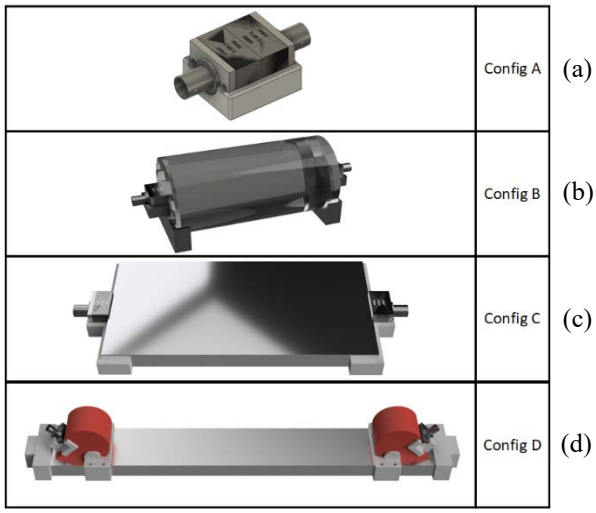

Figure 11. Ultrasonic Communication Through Solid Channel Setups

Figure 12 shows the information that is transmitted over the channel. A message "IUS2018" is modulated with the on-off-keying (OOK) modulation method.

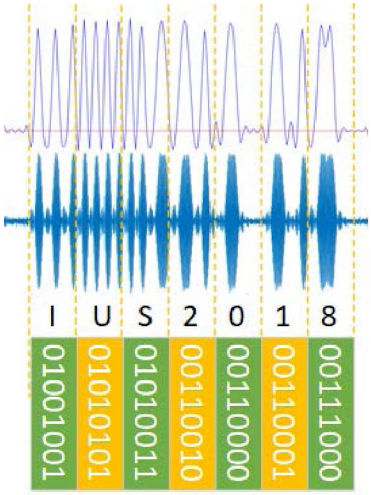

Figure 12. Message Modulated with OOK Method

With IQ modulation, we can use any modulation methods as desired. Figure 13 presents an experimental result using Configuration D (see Figure 11). Two 2.5 MHz transducers with 60-degree wedges are used to conduct this experiment. The transducers are 40 cm apart from each other. In this figure, (a) is the transmitted in-phase and quadrature components, (b) is the received in-phase and quadrature components, (c) represents for the transmitted and received power spectrum, and (d) is transmitted and received constellation map. This test result has 0 bit error rate. The bit rate of the QAM modulation in ideal channel condition can reach up to 625 kbps with 2.5 MHz ultrasonic carrier frequency.

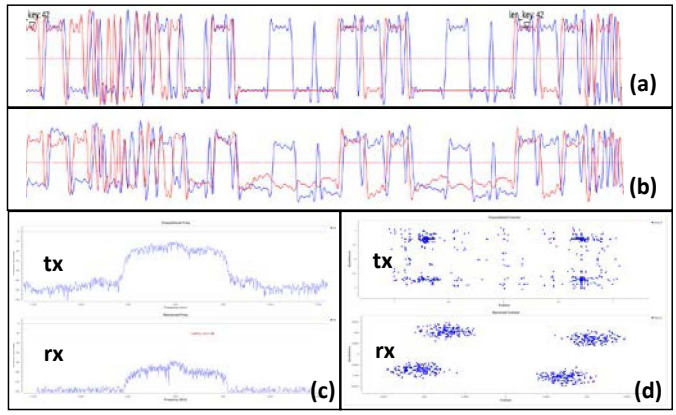

Figure 13. QAM Experimental Results

Figure 14 shows two sets of result when BPSK is used to modulate the transmitted signal with the same configuration described in QAM result. These two results are acquired by setting the distance of two transducers to 5 cm and 50 cm apart. Both results are error free. The former result with 5 cm distance has a much better signal to noise ratio as it can be seen in the figure. Experiments confirms that the bit rate of BPSK modulation in ultrasonic communication can reach up to 625 kbps with 2.5 MHz transducers.

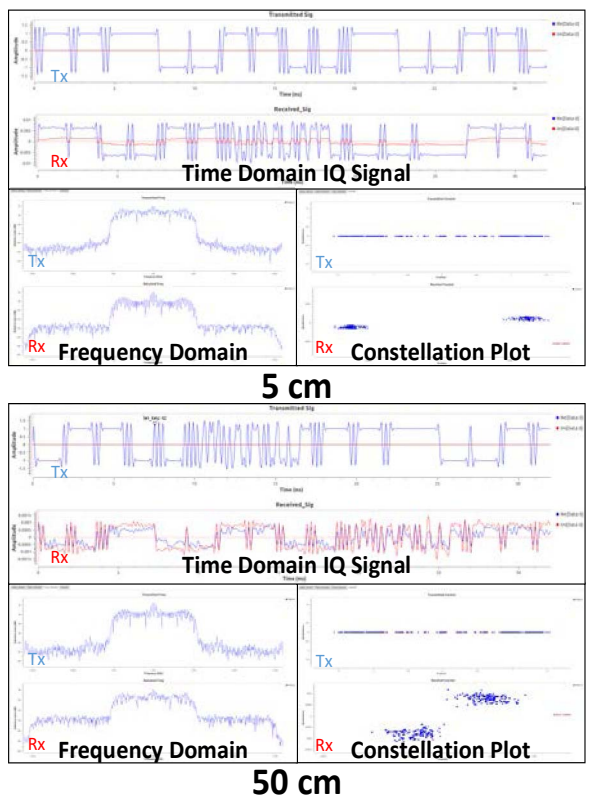

Figure 14. BPSK Communication Results

Authorized licensed use limited to: Illinois Institute of Technology. Downloaded on October 02,2020 at 15:17:54 UTC from IEEE Xplore. Restrictions apply.

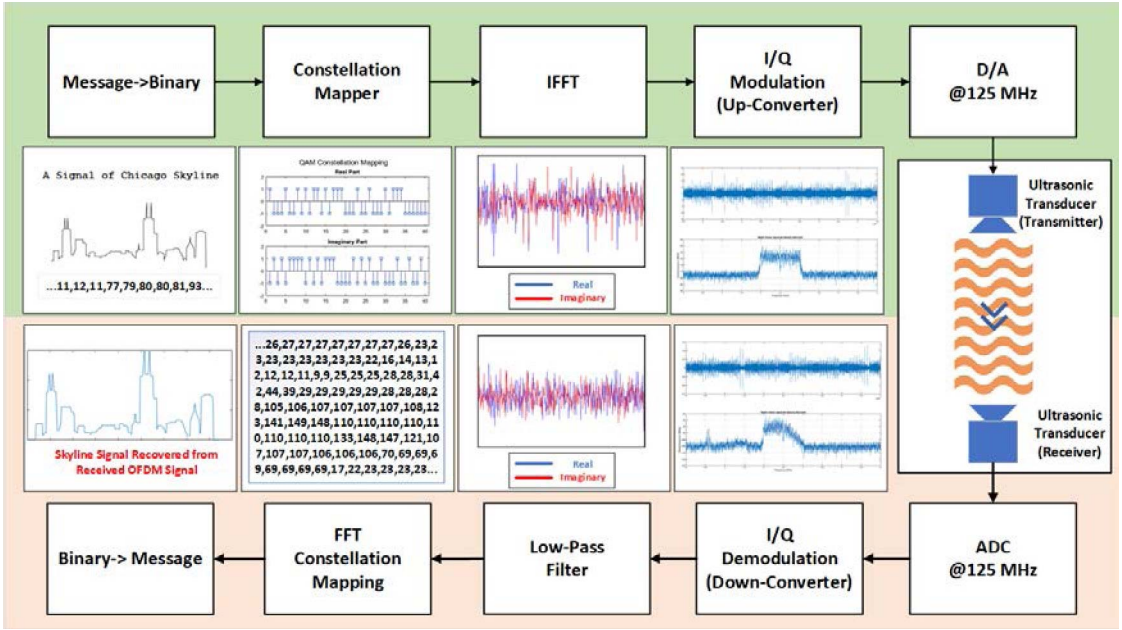

Figure 15. OFDM Diagram and Experimental Results

A modulation technique called OFDM can be used to acquire a more compact spectral utilization in ultrasonic communication. An example of using IQ modulation for OFDM-QAM is shown in Figure 15. As shown in this figure, a series of binary data will be paralleled and mapped using QAM constellation. IFFT is then applied to the paralleled binary data, this will form a time domain baseband signal that only contains the frequency component as we designed. The generated baseband signal is then modulated on the higher ultrasonic frequency carrier using IQ modulation. Time synchronization can be done by using cyclic patching method. After the receiver picks up the signal from channel, the baseband will be taken out from its carrier frequency using IQ demodulation. Finally, an FFT is applied to the received baseband signal to recover the binary information. With OFDM technique using Configuration B channel (see Figure 11) with 2.5 MHz transducers, the bit rate can reach to1.5 Mbps.

V. Communication Through Solids using EMAT

Conventional ultrasonic communication systems in solid channels uses piezoelectric transducers as transmitter and receiver. The quality of the received signal is highly dependent on the coupling condition between the transducer and solid channel [31]. Electromagnetic acoustic transducer (EMAT) is a non-contact transducer which can be used as an alternate to the PZT transducers. Furthermore, EMAT holds promise for the transmission of information in solids even in extreme environments such as high temperature [32]. EMAT ultrasonic communication has certain limitations. EMAT requires higher excitation power compared to PZT transducer since its transduction efficiency is low. EMAT to EMAT transmission may induce large RF interferences. EMAT generates bidirectional ultrasonic waves which may add more reflections and reverberation. Both interference and reflections will cause inter-symbol interference (ISI) [33]. With the presence of ISI, the subsequent signals can be affected by reflections and reverberation of the current signal. These disadvantages are critical factors that limits the usage of EMAT in ultrasonic communication applications. In this section, methods that can possibly overcome the disadvantages of using EMAT for communication are explored. A practical solution to alleviate interference is to use EMAT as the transmitter and PZT as the receiver [34].

A communication platform using EMAT (see Figure 16 (a)) is designed to assess the efficiency of Lamb waves for communications in terms of bit rate (BR) the bit error rate (BER). The communication platform, shown in Figure 16(a), consists of an EMAT transmitter and a PZT receiver. An arbitrary function generator and a power amplifier are used for EMAT excitation. The transmitted signal is detected by a receiver PZT transducer. Then, the received signal is amplified by a low-noise amplifier and sampled by a data acquisition unit. A stainless-steel plate and a stainless-steel pipe are used as the ultrasonic communication channels for system performance evaluation. Figure 16(b) shows a 169 cm long, 10 cm wide and 0.95 cm thick stainless-steel plate. Figure 16(c) shows a 194 cm long, 6.1 cm outer radius and 4.1 cm inner radius stainless-steel pipe.

The bitrate of the communication can be selected by setting the pulse duration of each bit. Figure 17 displays the test of different bit duration on plate and pipe. When the steel plate is used as channel, the received signal is clearly matching the transmitted signal for different bit rates. When a proper threshold value is set on the received waveform, the transmitted information can be fully recovered. In the pipe channel test data, the received signal with 100 μs and 50 μs bit duration can be recovered. However, received signal with 33 μs and 25 μs bit duration is attenuated and distorted resulting in unacceptable BER. From the result of this experiment when EMAT is used

Authorized licensed use limited to: Illinois Institute of Technology. Downloaded on October 02,2020 at 15:17:54 UTC from IEEE Xplore. Restrictions apply.

as a transmitter and PZT as a receiver, bitrate can reach up to 40 kbps in plate and 20 kbps in pipe.

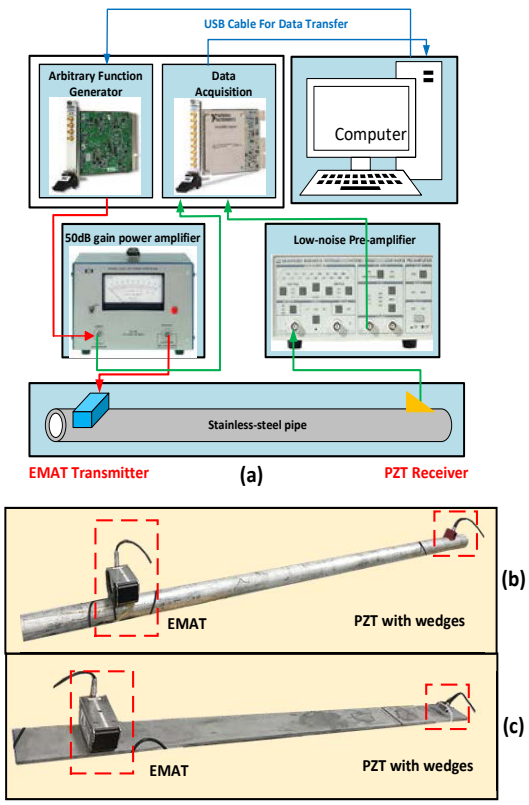

Figure 16. (a) Schematic of the Laboratory Communication, (b) Steel Plate Channel and (c) Steel Pipe Channel

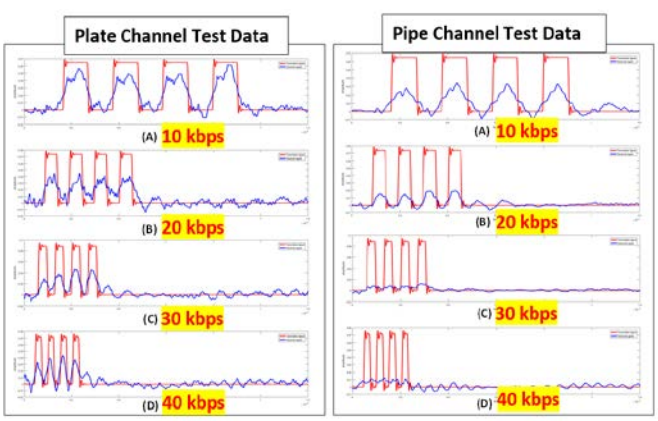

Figure 17. Bit Rate Test Results using Plate and Pipe Channels

Another practical solution for ultrasonic communications through solid is to use periodic-permanent-magnet (PPM) EMAT as transmitter and as a receiver. PPM-EMAT can selectively excite different modes of shear horizontal (SH) waves. SH wave has a predictable dispersion curve [35], which can help to analyze the multipath effect in solid. As shown in Figure 18, PPM-EMAT is mainly composed of periodic permanent magnets and a meander coil [36]. The arrows in the figure demonstrate SH wave propagation directions in this configuration.

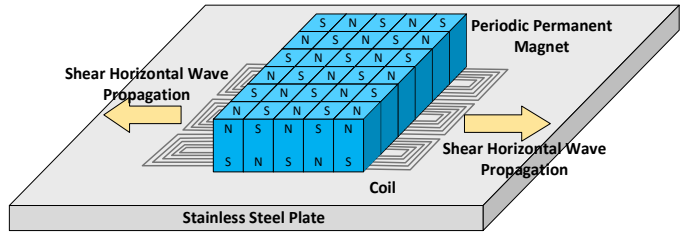

Figure 18. PPM-EMAT Configuration

Let a Shear wave generated by the EMAT propagates in a layer at an angle α (see Figure 19) Line AE is the incident wave front.

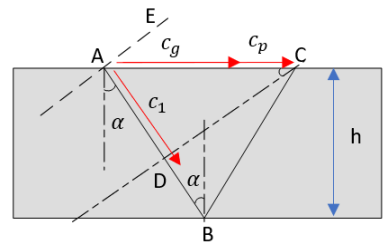

Figure 19. Formation of SH Waves in a Layer [37]

The term h is the thickness of the layer, and line CD is the wave front of the wave propagates with angle α. At a certain incident angle, the wave reflected from the lower surface (Point B) and traveled to Point C coincides in phase with the wave front CD [37]:

$$2\pi\left(\frac{ABC}{\lambda_T}-\frac{AD}{\lambda_T}\right)=\varphi=2n\pi \tag{1}$$

Where $\lambda_T=\frac{c_T}{f}$ is the wavelength in the layer, and n is an integer referred to the modes of symmetric (when n is even) and antisymmetric (when n is odd) waves. According to the geometry of the layer and monochromatic wave angle, the group velocity and phase velocity can be written as [37] [38]:

$$\begin{cases} c_g(f,h)=c_T\sqrt{1-\dfrac{\left(\frac{n}{2}\right)^2}{\left(\frac{fh}{c_T}\right)^2}} \\ c_p(f,h)=2c_T\left(\dfrac{fh}{\sqrt{4(fh)^2-n^2c_T^2}}\right) \end{cases} \tag{2}$$

The above equations indicate that the group and phase velocities depend on the thickness of the layer h, and the frequency of elastic waves f. For this study, we examined a thin stainless-steel plate with $h=9.5mm$. The phase and group velocities dispersion curves for different integer n ($SH0, SH1, SH2$ ...) are shown in Figure 20.

Authorized licensed use limited to: Illinois Institute of Technology. Downloaded on October 02,2020 at 15:17:54 UTC from IEEE Xplore. Restrictions apply.

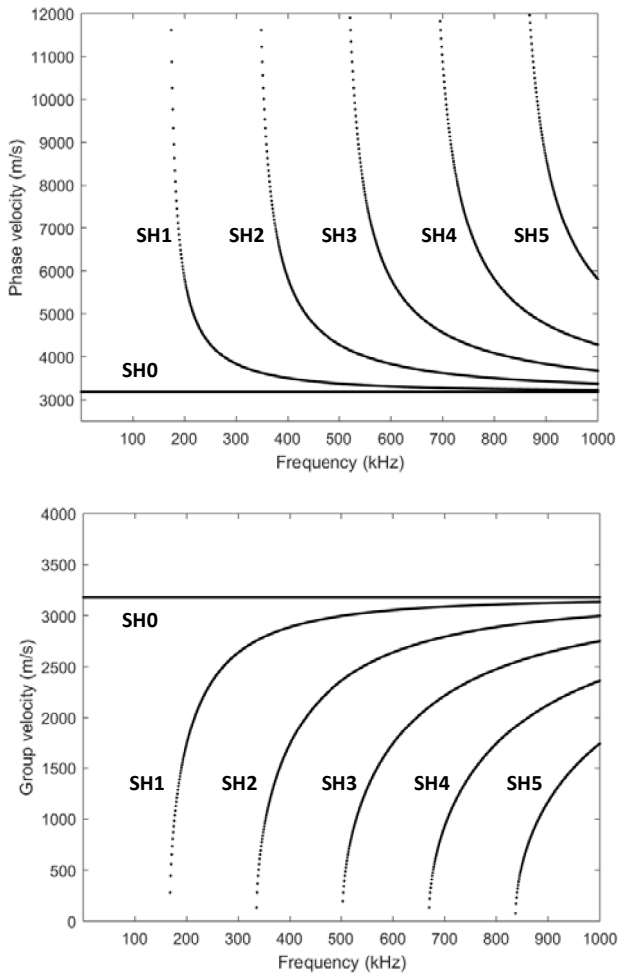

Figure 20. Shear Wave Dispersion Curve Phase Velocity and Group Velocity

When $n = 0$ we have $c_g = c_p = c_T = 3180\, m/s$, a non-dispersive wave propagating at the shear wave velocity in the steel material c_T. All other Shear Horizontal (SH) modes are dispersive.

In a communication system, the ideal situation is that the transmitter sends a fixed duration pulse representing a bit and receiver detects the transmitted bit. In practice, PPM-EMAT transmitter and receiver will suffer from SH wave reflections and RF interference. Different SH modes are expected to be generated by changing the excitation frequency. We have examined the performance of PPM-EMAT for communication. Figure 21 shows the communication test platform. Figure 22 shows the results of communication. When the bit duration is 400 µs, the received signal is clear and can be recovered. It means that applying PPM-EMAT as transmitter and receiver, the system can achieve a 2.5 kbps communication rate. There is around 900 µs time delay on the received signal, which matches the group velocity of SH wave. With setting the appropriate threshold on the waveform, there exists a 1-bit error among the transmitted 250 bits. We repeat the experiments with different binary code, the average bit error was 1.2 error bits out of 250 bits transmission. This corresponds to the 0.48%-bit error rate.

VI. Conclusion

In this paper, ultrasonic communication system for different channels with a variety of system configurations are introduced. This paper focused on the ultrasonic communication in solid using piezoelectric transducers and EMATs. We developed SDUC system for testing a variety of modulation techniques. Furthermore, plates and pipes are used to test the system for optimal bitrate and BER performance.

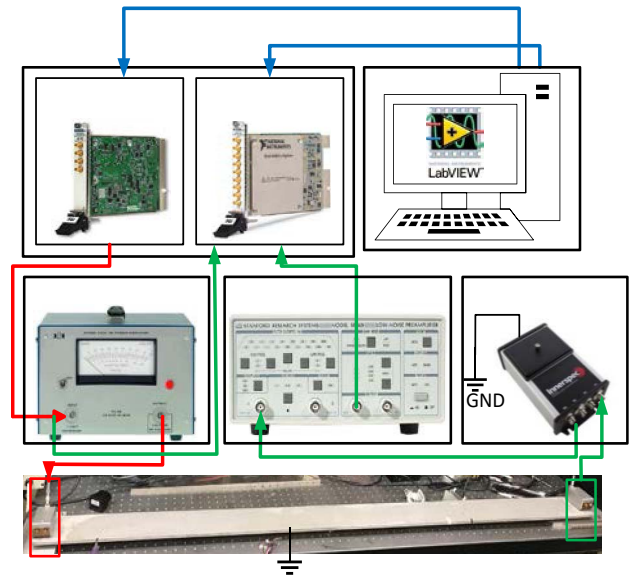

Figure 21. Communication Test Platform for PPM-EMAT

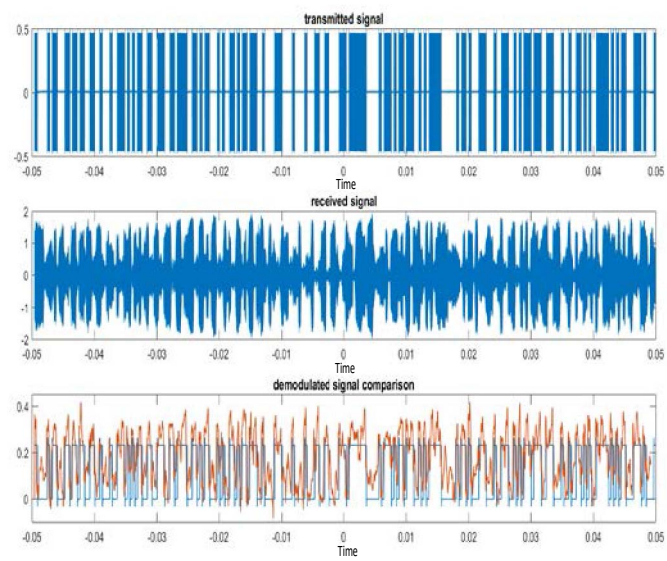

Figure 22. 250-bit Signal Analysis using PPM-EMAT

Authorized licensed use limited to: Illinois Institute of Technology. Downloaded on October 02,2020 at 15:17:54 UTC from IEEE Xplore. Restrictions apply.

VII. REFERENCES

[1] J. Saniie and D. T. Nagle, "Pattern recognition in the ultrasonic imaging of reverberant multilayered structures," *IEEE Transactions on Ultrasonics, Ferroelectrics, and Frequency Control,* vol. 36, pp. 80-92, 1989.

[2] J. Saniie, "Ultrasonic signal processing : system identification and parameter estimation of reverberant and inhomogeneous targets," Ph.D Thesis, Purdue University, 1981.

[3] J. Saniie and N. M. Bilgutay, "Quantitative grain size evaluation using ultrasonic backscattered echoes," *The Journal of the Acoustical Society of America,* vol. 80, p. 1816, 1998.

[4] J. Saniie, T. Wang and N. Bilgutay, "Statistical evaluation of backscattered ultrasonic grain signals," *The Journal of the Acoustical Society of America,* vol. 84, p. 400, 1998.

[5] B. Wang, J. Saniie, S. Bakhtiari and A. Heifetz, "Architecture of an ultrasonic experimental platform for information transmission through solids," in *2017 IEEE International Ultrasonics Symposium (IUS)*, 2017.

[6] B. Wang and J. Saniie, "Software defined ultrasonic system for communication through solid structures," in *IEEE International Conference on Electro Information Technology (EIT)*, 2018.

[7] X. Huang, J. Saniie, S. Bakhtiari and A. Heifetz, "Applying EMAT for ultrasonic communication through steel plates and pipes," in *IEEE International Conference on Electro/Information Technology*, 2018.

[8] P. Getreuer, C. Gnegy, R. F. Lyon and R. A. Saurous, "Ultrasonic communication using consumer hardware," *IEEE Transactions on Multimedia,* vol. 20, pp. 1277-1290, 2018.

[9] Marvelmind, "Marvelmind indoor navigation system operating manual," 4 9 2018. [Online]. Available: https://marvelmind.com/pics/marvelmind_navigation_system_manual.pdf. [Accessed 8 10 2018].

[10] J. Qi and G.-P. Liu, "A robust high-accuracy ultrasound indoor positioning system based on a wireless sensor network," *Sensors,* vol. 17, no. 11, p. 2554, 2017.

[11] M. Yoneyama and J.-i. Fujimoto, "The audio spotlight: An application of nonlinear interaction of sound waves to a new type of loudspeaker design," *J. Acoust. Soc. Am,* vol. 73, no. 9, pp. 1532-1536, 1983.

[12] M. Chitre, S. Shahabudeen, L. Freitag and M. Stojanovic, "Recent advances in underwater acoustic communications amp; networking," in *OCEANS 2008*, Vols. 2008-Supplement, 2008, pp. 1-10.

[13] J. Lloret, S. Sendra, M. Ardid, Rodrigues and J.J.P.C, "Underwater wireless sensor communications in the 2.4 GHz ISM frequency band," in *Sensors 2012*, 2012.

[14] G. Hattab, M. El-Tarhuni, M. Al-Ali, T. Joudeh and N. Qaddoumi, "An underwater wireless sensor network with realistic radio frequency path Loss model," *International journal of distributed sensor networks,* 2013.

[15] I. F. Akyildiz, D. Pompili and T. Melodia, "Challenges for efficient communication in underwater acoustic sensor networks," *ACM SIGBED Review,* vol. 1, no. 2, pp. 3-8, 2004.

[16] OTS, "Ocean technology systems buddy phone 2-channel user's guide," 2009. [Online]. Available: http://www-oceantechnologysystems.clients.mwrc.net/wp-content/uploads/2011/07/Buddy-Phone-2-Channel-revB.pdf. [Accessed 5 10 2018].

[17] IARC, "IARC classifies radiofrequency electromagnetic fields as possibly carcinogenic to humans," 31 May 2011. [Online]. Available: http://www.iarc.fr/en/media-centre/pr/2011/pdfs/pr208_E.pdf. [Accessed 5 10 2018].

[18] W. Jiang and W. M. D. Wright, "An indoor airborne ultrasonic wireless communication network," *IEEE Transactions on Ultrasonics, Ferroelectrics, and Frequency Control,* vol. 65, pp. 1452-1459, 2018.

[19] J. Ureña, D. Gualda, Á. Hernández, E. García, J. M. Villadangos, M. C. Pérez, J. C. García, J. J. García and A. Jiménez, "Ultrasonic local positioning system for mobile robot navigation: From low to high level processing," in *2015 IEEE International Conference on Industrial Technology (ICIT)*, 2015.

[20] J. O. Coleman, "Signals and systems II-Part IV: DSP approaches to IQ modulation and demodulations," *IEEE Potentials,* vol. 29, no. 4, pp. 33-36, 2010.

[21] L. Guan, "FPGA and Digital Signal Processing," in *FPGA-based digital convolution for wireless applications*, 2017.

[22] O. Oralkan, A. S. Ergun, J. A. Johnson, M. Karaman, U. Demirci, K. Kaviani, T. H. Lee and B. T. Khuri-Yakub, "Capacitive micromachined ultrasonic transducers: next-generation arrays for acoustic imaging?," *IEEE Transactions on Ultrasonics, Ferroelectrics, and Frequency Control,,* vol. 49, no. 11, pp. 1596-1610, 2002.

[23] D. Schindel, D. Hutchins and W. Grandia, "Capacitive and piezoelectric air-coupled transducers for resonant ultrasonic inspection," *Ultrasonics,* vol. 34, no. 6, pp. 621-627, 1996.

[24] A. Burtin, N. Hovius and J. M. Turowski, "Seismic monitoring of torrential and fluvial processes," *Earth Surface Dynamic,* vol. 4, no. 2, pp. 4, 285–307, 2016.

[25] Z. Nazarchuk, V. Skalskyi and O. Serhiyenko, "Propagation of elastic waves in solids methodology and application," in *Acoustic Emission*, Springer International Publishing, 2017, pp. 29-60.

[26] S. Choi, H. Cho and C. J. Lissenden, "Selection of shear horizontal wave transducers for robotic nondestructive inspection in harsh environments," *sensors,* vol. 17, 2016.

[27] F. Sun, Z. Sun, Q. Chen, R. Murayama and H. Nishino, "Mode conversion behavior of guided wave in a pipe inspection system based on a long waveguide," *Sensors,* vol. 16, no. 10, p. 16(10), 2016.

[28] Xilinx, "Zynq-7000 SoC data Sheet: overview," 2 July 2018. [Online]. Available: https://www.xilinx.com/support/documentation/data_sheets/ds190-Zynq-7000-Overview.pdf. [Accessed 6 10 2018].

[29] Xilinx, "CIC compiler v4.0 LogiCORE IP product guide," 5 OCT 2016. [Online]. Available: https://www.xilinx.com/support/documentation/ip_documentation/cic_compiler/v4_0/pg140-cic-compiler.pdf. [Accessed 26 Feb 2018].

[30] Xilinx, "DDS compiler v6.0 LogiCORE IP product guide," 20 Dec 2017. [Online]. Available: https://www.xilinx.com/support/documentation/ip_documentation/dds_compiler/v6_0/pg141-dds-compiler.pdf. [Accessed 26 Feb 2018].

[31] S. Chakraborty; G. J. Saulnier; K. W. Wilt; E. Curt; H. A. Scarton; R. B. Litman, "Low-power, low-rate ultrasonic communications system transmitting axially along a cylindrical pipe using transverse waves," *IEEE Transactions on Ultrasonics,* vol. 62, no. 10, pp. 1788-1796, 2015.

[32] E. Dobbs and J. Llewellyn, "Generation of ultrasonic waves without using a transducer," *Non-Destructive Testing,* vol. 4, no. 1, pp. 49-56, 1971.

[33] M. Stojanovic, "Recent advances in high-speed underwater acoustic communications," *IEEE Journal of Oceanic Engineering,* vol. 21, no. 2, pp. 125 - 136, 1996.

[34] X. Huang, J. Saniie, S. Bakhtiari and A. Herfetz, "Applying EMAT for ultrasonic communication through steel plates and pipes," in *ELECTRO/INFORMATION TECHNOLOGY (EIT)*, Rochester, Michigan, USA, 2018.

[35] R. A. Kline, "Measurement of attenuation and dispersion using an ultrasonic spectroscopy," *The Journal of the Acoustical Society of America,* vol. 76, no. 2, 1998.

[36] M. Hirao and H. Ogi, Electromagnetic acoustic transducers, Springer Japan, 2017.

[37] Z. Nazarchuk, V. Skalskyi and O. Serhiyenko, Acoustic emission methodology and application, Springer International Publishing, 2017.

[38] J. L. Rose, Ultrasonic waves in solid media, Cambridge, United Kingdom: CAMBRIDGE UNIVERSITY PRESS, 1999.

Authorized licensed use limited to: Illinois Institute of Technology. Downloaded on October 02,2020 at 15:17:54 UTC from IEEE Xplore. Restrictions apply.